IF IN DOUBT - ASK

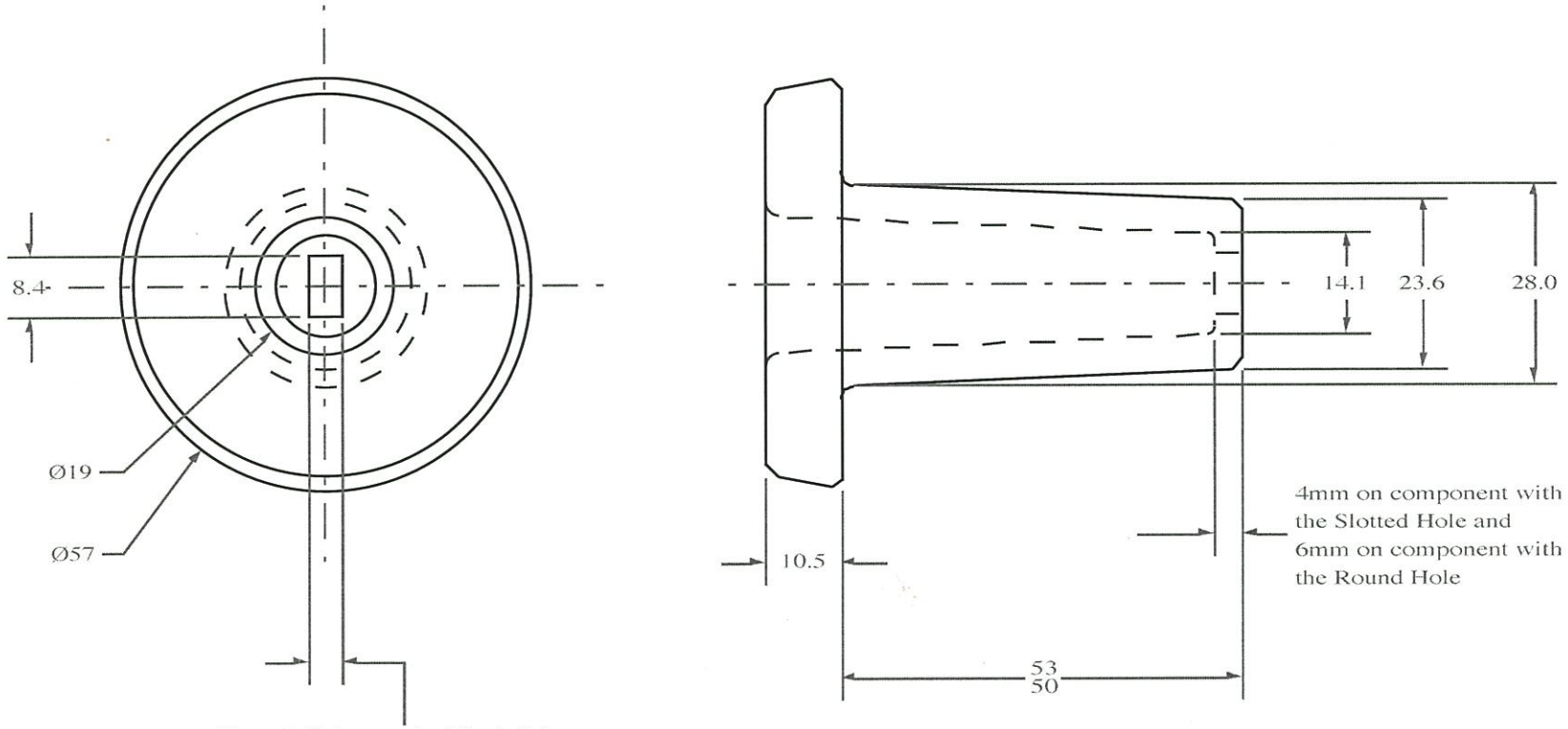

Overall Tolerance is 4.9 +/- 0.3
When manufacturing please aim for the dimension to be 4.7 to 5.1mm

ALL DIMENSIONS SHOWN IN mm

NOTES
Slotted Hole
Part No. 47803

Round Hole
Part No.47803R

Round Hole Ø7mm

CUSTOMER

DESCRIPTION
Cup Lock Anchor

MATERIAL
Anchor Refractory

DRAWING NUMBER
47803

DATE DRAWING ISSUED	ISSUE
15/05/05	1

SCALE	SHEET	
NTS	1of1	A4

THIRD ANGLE PROJECTION